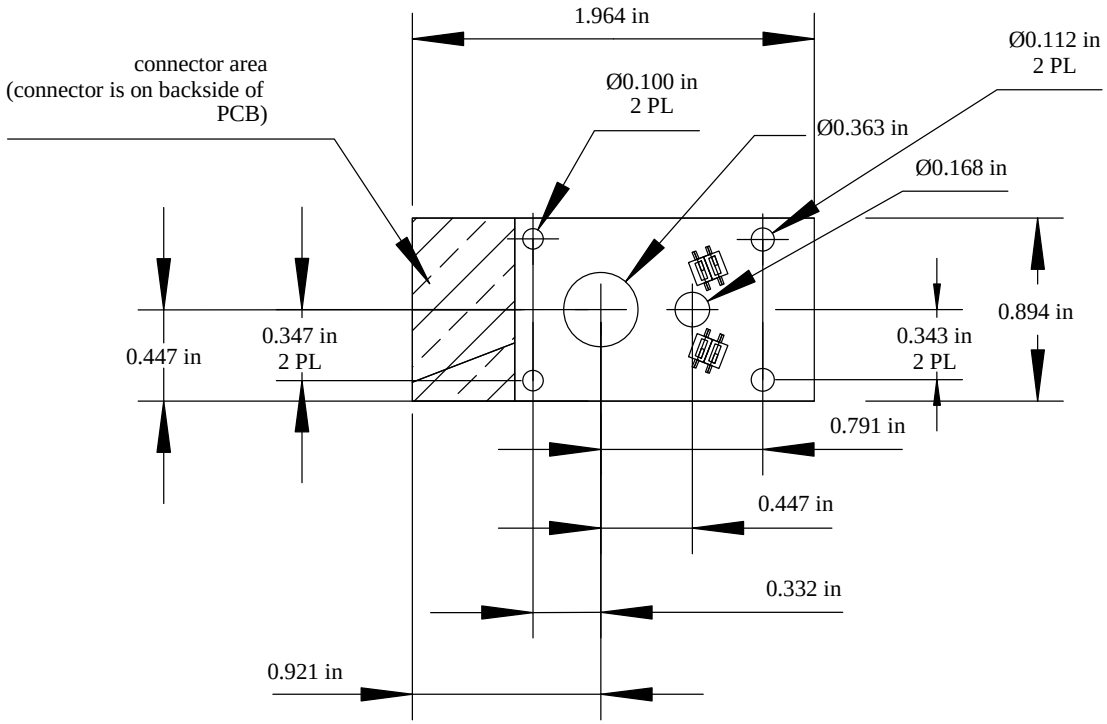

NOTES:
Board is .031 in FR4
Sensor Height above board is .07 in
Nominal codewheel position above board is .11 in

Copyright (c) 2004-2005, Noetic Design, Inc.
All rights reserved. WheelWatcher is a trademark of Noetic Design, Inc.
This document and its contents are property of Noetic Design, Inc. This document is provided for reference use only; the sharing of this document with Noetic Design, Inc. customers does not constitute a license to copy, distribute to third parties, nor to use as a basis for manufacturing competing products.

NOETIC
Noetic Design, Inc.
25 NW 23rd PL STE 6 PMB 181
Portland, OR 97210

WW-02: WheelWatcher for Solarbotics GM2/3/8/9 Motors

Date	Document Number	Sheet
10/24/2005	003-0001-001	1
Revision 1.02		Of 1